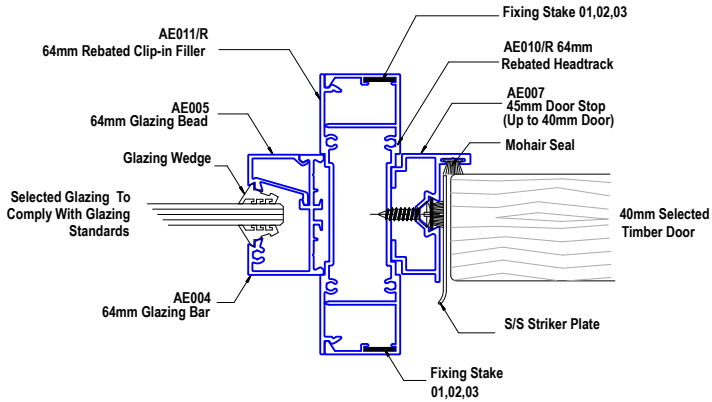
Fixing Stake 01,02,03
AE011/R
64mm Rebated Clip-in Filler
AE010/R 64mm
Rebated Headtrack
AE007
45mm Door Stop
(Up to 40mm Door)
AE005
64mm Glazing Bead
Mohair Seal
Glazing Wedge
Selected Glazing To
Comply With Glazing
Standards
40mm Selected
Timber Door
AE004
64mm Glazing Bar
S/S Striker Plate
Fixing Stake
01,02,03

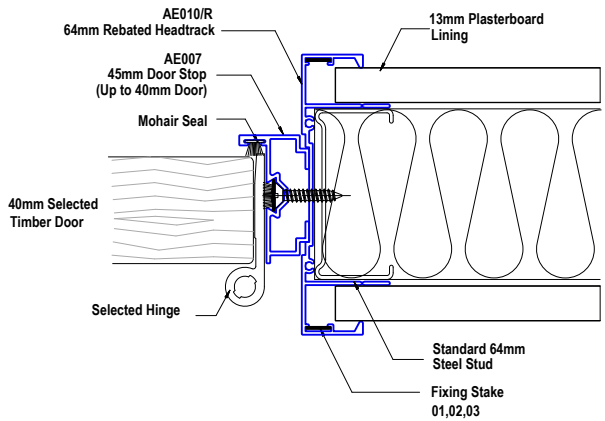
AE010/R
64mm Rebated Headtrack
13mm Plasterboard
Lining
AE007
45mm Door Stop
(Up to 40mm Door)
Mohair Seal
40mm Selected
Timber Door
Selected Hinge
Standard 64mm
Steel Stud
Fixing Stake
01,02,03